Part number

CJK 8M

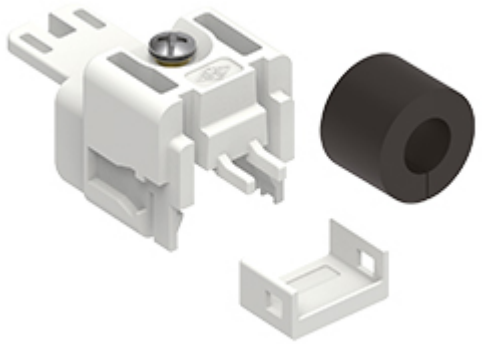

Male RJ45 connector, CJK adapters series, size "21.21", with gasket, without connector

Product description	
Product type	Insert
Series	CJK adapters
Connection type	RJ45
Gender	Male
N. of poles	1 seat for RJ45 connector
Size	Size "21.21"
Specification	With gasket RJ45, universal adapter for patch cord
Further technical details	
Mating cycles	≥ 500
Insulation resistance	≥ 10 GΩ
Weight	10,50 g
Operating temperature range (min, max)	-40°C...+70°C
UL 94 flammability rating	V-0

Material properties	
RoHs conformity	Compliant with exemption 6(c): copper alloy containing up to 4% lead by weight
China RoHs - EFUP	50
REACH SVHC substances	Yes Lead
SCIP number	5a97d67d-dd49-45fe-94c0-411f951ef5ee
Approvals / Standards	
UL	ECBT2
cUL	ECBT8
General ordering information	
EAN13 code	8015747264235
eCl@ss 8.1	27440205
ETIM 7.0	EC000438
Packaging Information	
Packaging length	175,00 mm
Packaging height	195,00 mm
Packaging width	260,00 mm
Packaging weight	1,25 kg
Packaging volume	8,87 dm³
Packaging description	Carton box
Packaging quantity	100 Pcs
Packaging EAN code	8015747264259
Sub-packaging description	Plastic bag
Sub-packaging quantity	1 Pcs
Sub-packaging EAN barcode	8015747268875

Part number

CJK 8M

Catalogue drawings

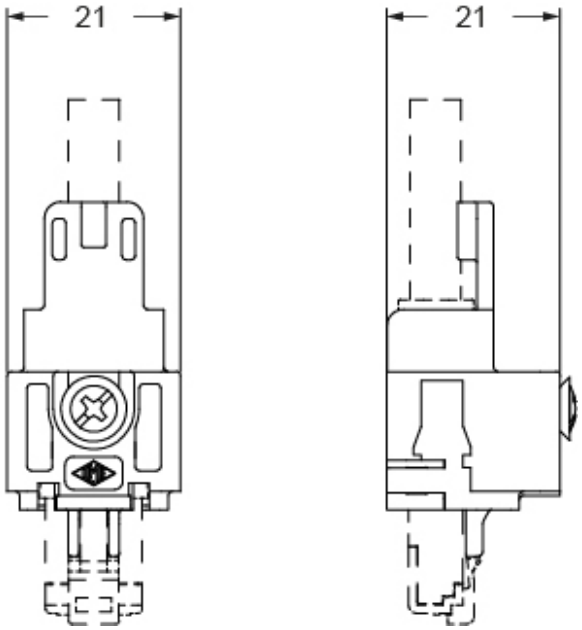
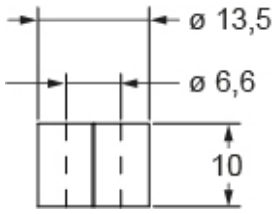
Catalogue drawings