Part number

MHV 48 L40

Hood, C-TYPE series, with 2 pegs, M40 top cable entry, size "104.62"

Product description	
Product type	Hood
Series	C-TYPE
Closing type	With 2 pegs
Size	Size "104.62"
Cable entry	Top cable entry with adapter M40
Technical data	
IP degree of protection	IP65 / IP66 / IP69
Further technical details	
Weight	642,00 g
Operating temperature range (min, max)	-40°C...+125°C

Material properties	
Colour	RAL 7040 grey
RoHs conformity	Compliant with exemption 6(c): copper alloy containing up to 4% lead by weight
China RoHs - EFUP	50
REACH SVHC substances	Yes Lead
SCIP number	15deaf78-e939-4401-a0b0-e2228ca32a03
Approvals / Standards	
Certifications	DNV, BV
UL	ECBT2
cUL	ECBT8
General ordering information	
EAN13 code	8015747056410
eCl@ss 8.1	27440202
ETIM 7.0	EC000437
Packaging Information	
Packaging length	190,00 mm
Packaging height	140,00 mm
Packaging width	290,00 mm
Packaging weight	2,75 kg
Packaging volume	7,71 dm³
Packaging description	Carton box
Packaging quantity	4 Pcs
Packaging EAN code	8015747056427
Sub-packaging weight	0,69 kg
Sub-packaging description	Plastic packaging
Sub-packaging quantity	1 Pcs
Sub-packaging EAN barcode	8015747056434

Part number

MHV 48 L40

Catalogue drawings

CHO L - MHO L - MFO L

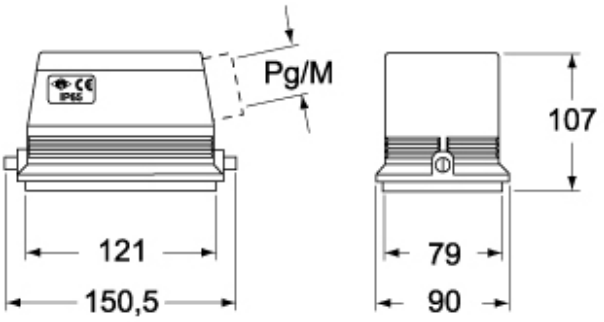
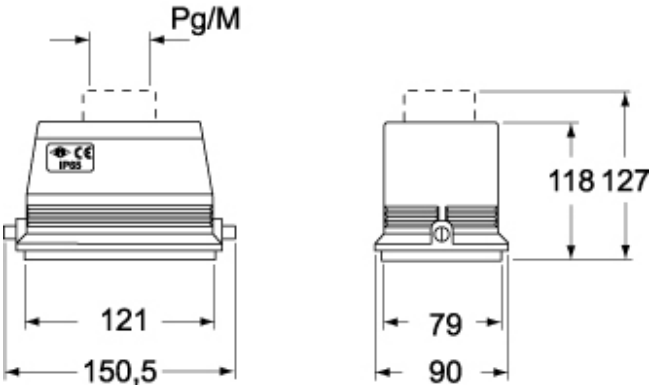
CHV L - MHV L - MFV L