Part number

CR 10 GTPC

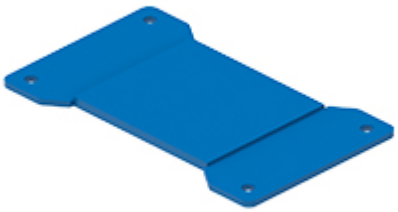

Gasket for surface mounting housings T-TYPE/H e T-TYPE/C series, for size "57.27"

Product description	
Product type	Gasket
Specification	For surface mounting housings T-TYPE/H and T-TYPE/C series For size "57.27"
Further technical details	
Weight	11,00 g

Material properties	
Main material	Silicone rubber
Colour	RAL 5015 blue
RoHs conformity	Compliant
China RoHs - EFUP	E
REACH SVHC substances	No
General ordering information	
EAN13 code	8015747274708
eCl@ss 8.1	27449290
ETIM 7.0	EC002943
Packaging Information	
Sub-packaging weight	0,11 kg
Sub-packaging description	Plastic bag
Sub-packaging quantity	10 Pcs
Sub-packaging EAN barcode	8015747274845

Part number

CR 10 GTPC

Catalogue drawings

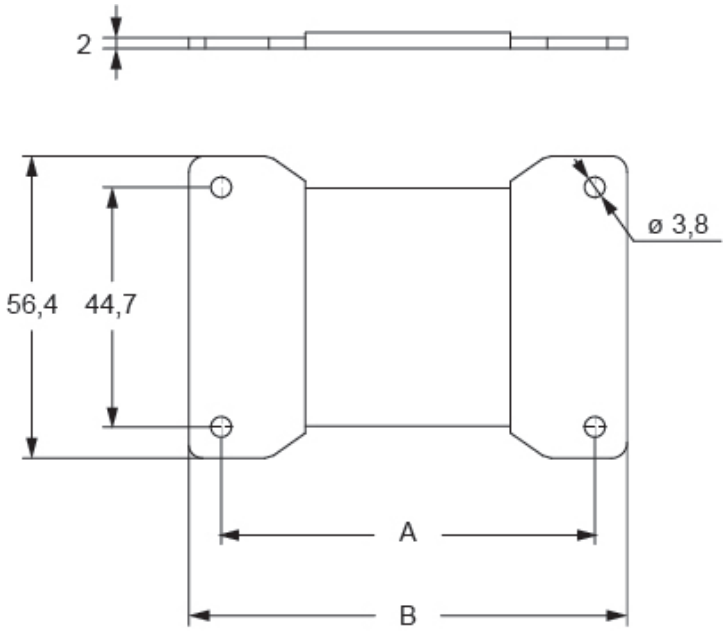

part No.	polarity	A	B
CR 06 GTPC	06	69,7	81,7
CR 10 GTPC	10	81,7	93,9
CR 16 GTPC	16	104,7	116,7
CR 24 GTPC	24	131,7	143,6