Part number

CK 03 VGS

Hood, CK series, with 1 lever, Pg11 top cable entry, size "21.21", white colour

Product description	
Product type	Hood
Series	CK
Closing type	With 1 lever
Size	Size "21.21"
Cable entry	Top cable entry Pg11
Specification	White colour
Technical data	
IP degree of protection	IP44 - IP66 / IP67 / IP69 with CKR 65 (D)
Further technical details	
Weight	22,00 g
Operating temperature range (min, max)	-40°C...+125°C

Material properties	
Colour	RAL 7035 grey
RoHs conformity	Compliant
China RoHs - EFUP	E
REACH SVHC substances	No
Approvals / Standards	
UL	ECBT2
cUL	ECBT8
General ordering information	
EAN13 code	8015747026727
Packaging Information	
Packaging length	330,00 mm
Packaging height	170,00 mm
Packaging width	230,00 mm
Packaging weight	2,22 kg
Packaging volume	12,90 dm³
Packaging description	Carton box
Packaging quantity	100 Pcs
Packaging EAN code	8015747026734
Sub-packaging weight	0,22 kg
Sub-packaging description	Carton box
Sub-packaging quantity	10 Pcs
Sub-packaging EAN barcode	8015747026741

Part number

CK 03 VGS

Catalogue drawings

CK V(N)S - MK V(N)

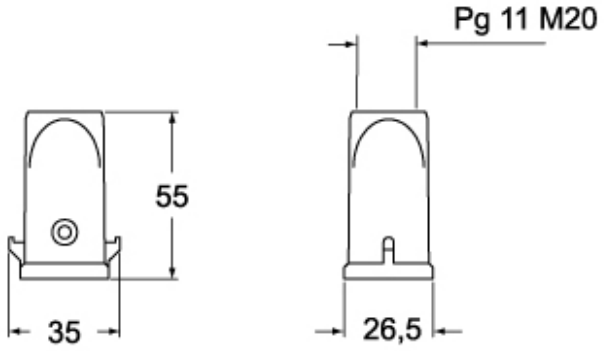

CK VA(N)S - MK VA(N)

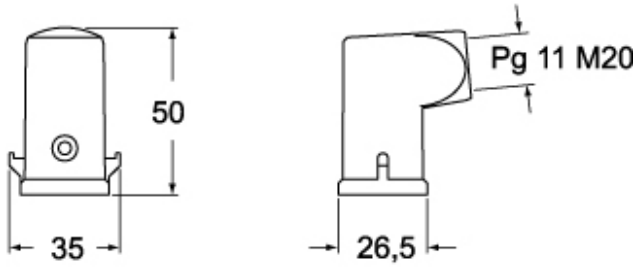
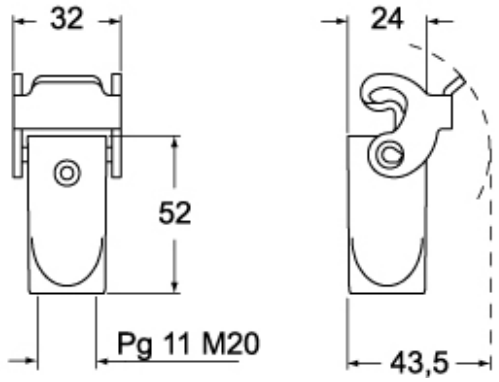
CK VG(N)S - MK VG(N)