Part number

CKF 03

Female insert, CK series, screw terminal connection, 3 poles + PE, 10 A 230/400 V 4 kV 3, size "21.21"

Product description	
Product type	Insert
Series	CK
Connection type	Screw terminal connection
Gender	Female
N. of poles	3 poles + ⏚
Size	Size "21.21"
Technical data	
Current	10 A
Voltage	230 - 400 V
Rated impulse withstand voltage	4 kV
Pollution degree	3
Rated voltage according to UL/CSA	600 V
Wire cross-section	0,75 mm² - 2,50 mm²
AWG size	18 - 14
Contact type	Turned silver plated
IP degree of protection	IP20 without enclosure, IP44/IP66/IP67/IP68/IP69 with enclosure
Further technical details	
Characteristics according to EN 61984	10A 230/400V 4kV 3; 10A 400/690V 4kV 2
Mating cycles	≥ 500
Insulation resistance	≥ 10 GΩ
Contact resistance	≤ 2 mΩ
Weight	13,00 g
Operating temperature range (min, max)	-40°C ... +100°C
Conductors stripping length	6 mm
UL 94 flammability rating	V-1
Torque for main contact	M3: 0,5 Nm; 4,4 lb.in (0,5 x 3 mm)
Tightening torque for PE connection	M3: 0,5 Nm; 4,4 lb,in (0,5 x 3 mm)
Tightening torque for fixing screws	M3: 0,5 Nm; 4,4 lb.in (Ph1 or 0,8 x 5,5 mm)

Material properties	
Main material	Polycarbonate (PC)
Other materials	Contacts: copper alloy
Colour	RAL 7032 grey
RoHs conformity	Compliant with exemption 6(c): copper alloy containing up to 4% lead by weight
China RoHs - EFUP	50
REACH SVHC substances	Yes Lead
SCIP number	1a9c93ff-0445-4a16-81e3-1609ac5274d6
Approvals / Standards	
Reference standard	EN 61984:2009-06
Certifications	CSA, CQC, DNV, BV, EAC
UL	ECBT2
General ordering information	
EAN13 code	8015747027939
eCl@ss 8.1	27440205
ETIM 7.0	EC000438
Packaging Information	
Packaging length	210,00 mm
Packaging height	200,00 mm
Packaging width	130,00 mm
Packaging weight	2,93 kg
Packaging volume	5,46 dm³
Packaging description	Carton box
Packaging quantity	200 Pcs
Packaging EAN code	8015747027946
Sub-packaging length	197,00 mm
Sub-packaging height	35,00 mm
Sub-packaging width	113,00 mm
Sub-packaging weight	0,59 kg
Sub-packaging volume	0,78 dm³
Sub-packaging description	Carton tray
Sub-packaging quantity	40 Pcs
Sub-packaging EAN barcode	8015747027953

Part number

CKF 03

Catalogue drawings

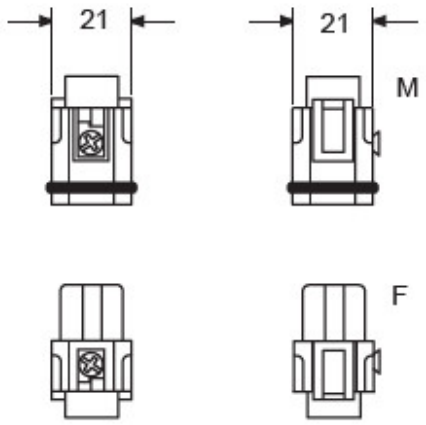

contacts side (front view)

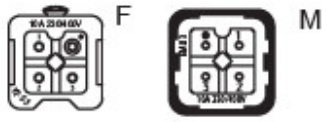
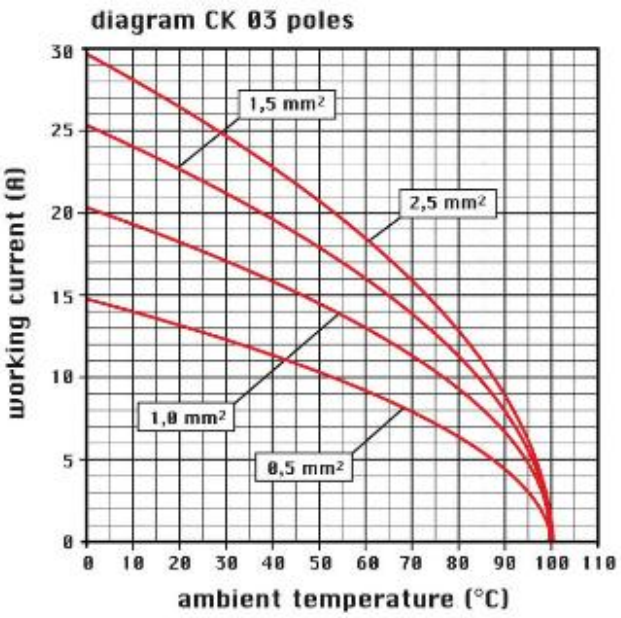
Derating curves