Part number

MAPW 24.232

Surface mounting housing, W-TYPE series, with 2 levers, M32 x 2 cable entry, size "104.27", high construction

Product description	
Product type	Surface mounting housing
Series	W-TYPE
Closing type	With 2 levers
Size	Size "104.27"
Cable entry	With cable entry M32 x 2
Specification	High construction
Technical data	
IP degree of protection	IP65 / IP66 / IP69
Further technical details	
Weight	480,00 g
Operating temperature range (min, max)	-40°C...+125°C

Material properties	
Colour	RAL 9005 black
RoHs conformity	Compliant
China RoHs - EFUP	E
REACH SVHC substances	No
Approvals / Standards	
Certifications	DNV, BV
UL	ECBT2
cUL	ECBT8
General ordering information	
EAN13 code	8015747205870
Packaging Information	
Packaging length	475,00 mm
Packaging height	220,00 mm
Packaging width	200,00 mm
Packaging weight	5,50 kg
Packaging volume	20,90 dm³
Packaging description	Carton box
Packaging quantity	10 Pcs
Packaging EAN code	8015747250252
Sub-packaging weight	2,75 kg
Sub-packaging description	Plastic packaging
Sub-packaging quantity	5 Pcs
Sub-packaging EAN barcode	8015747250269

Part number

MAPW 24.232

Catalogue drawings

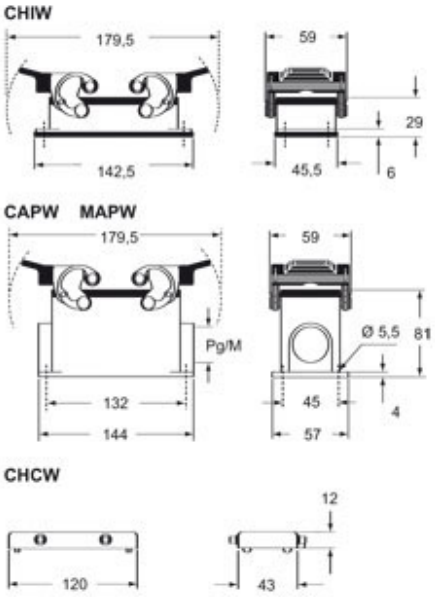

Notes