Part number

CK 03 I

Bulkhead mounting housing, CK series, with 1 lever, size "21.21", white colour

Product description	
Product type	Bulkhead mounting housing
Series	CK
Closing type	With 1 lever
Size	Size "21.21"
Cable entry	Without cable entry
Specification	White colour
Technical data	
IP degree of protection	IP44 - IP66 / IP67 / IP69 with CKR 65 (D)
Further technical details	
Weight	9,50 g
Operating temperature range (min, max)	-40°C...+125°C

Material properties	
Colour	RAL 7035 grey
RoHs conformity	Compliant
China RoHs - EFUP	E
REACH SVHC substances	No
Approvals / Standards	
UL	ECBT2
cUL	ECBT8
General ordering information	
EAN13 code	8015747026246
eCl@ss 8.1	27440202
ETIM 7.0	EC000437
Packaging Information	
Packaging length	330,00 mm
Packaging height	170,00 mm
Packaging width	230,00 mm
Packaging weight	1,73 kg
Packaging volume	12,90 dm³
Packaging description	Carton box
Packaging quantity	100 Pcs
Packaging EAN code	8015747026253
Sub-packaging weight	0,17 kg
Sub-packaging description	Carton box
Sub-packaging quantity	10 Pcs
Sub-packaging EAN barcode	8015747026260

Part number

CK 03 I

Catalogue drawings

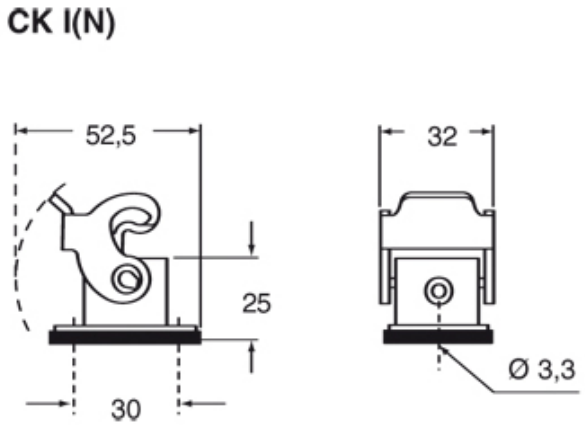
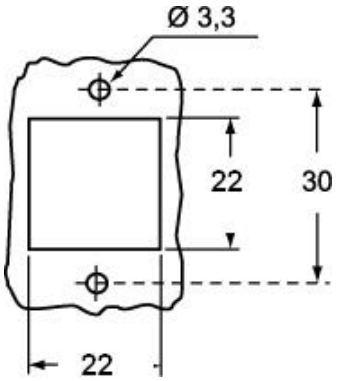
Catalogue drawings