Part number

MGV 06.40

Hood, IP68 series, with 2 screws, M40 top cable entry, size "44.27"

Product description	
Product type	Hood
Series	IP68
Closing type	With 2 screws
Size	Size 44.27
Cable entry	Top cable entry M40
Technical data	
IP degree of protection	IP66 / IP68 / IP69
Further technical details	
Weight	355,00 g
Operating temperature range (min, max)	-40°C...+125°C

Material properties	
Main material	Aluminium die-cast
Colour	RAL 9005 black
RoHs conformity	Compliant
China RoHs - EFUP	E
REACH SVHC substances	No
Approvals / Standards	
Certifications	DNV, BV
UL	ECBT2
cUL	ECBT8
General ordering information	
EAN13 code	8015747146449
eCl@ss 8.1	27440202
ETIM 7.0	EC000437
Packaging Information	
Packaging length	160,00 mm
Packaging height	115,00 mm
Packaging width	137,00 mm
Packaging weight	0,71 kg
Packaging volume	2,52 dm³
Packaging description	Carton box
Packaging quantity	2 Pcs
Packaging EAN code	8015747146678
Sub-packaging weight	0,36 kg
Sub-packaging description	Plastic packaging
Sub-packaging quantity	1 Pcs
Sub-packaging EAN barcode	8015747146685

Part number

MGV 06.40

Catalogue drawings

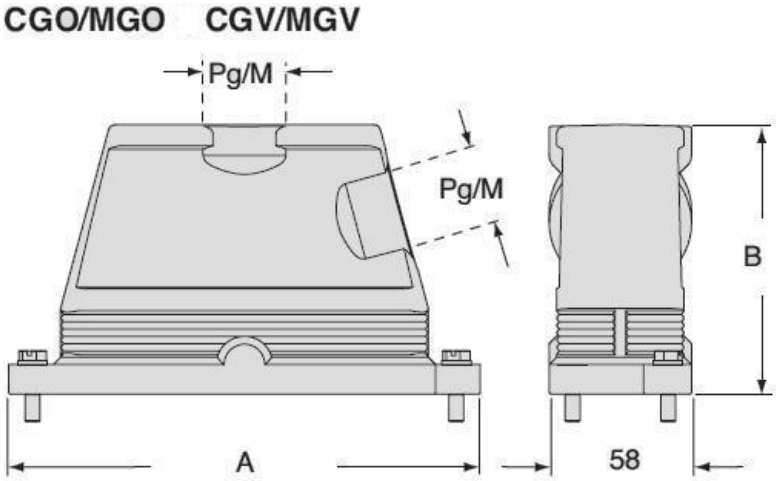

		A	B
CGO/MGO	CGV/MGV 06	133	101
CGO/MGO	CGV/MGV 10	146	101
CGO/MGO	CGV/MGV 16	166	111
CGO/MGO	CGV/MGV 24	193	111

Notes