Part number

MFV 06 LG40

Hood, C-TYPE series, with 1 lever, M40 top cable entry without adapter, size "44.27", high construction

Product description	
Product type	Hood
Series	C-TYPE
Closing type	With 1 lever
Size	Size 44.27
Cable entry	Top cable entry M40
Specification	High construction
Technical data	
IP degree of protection	IP65 / IP66 / IP69
Further technical details	
Weight	180,00 g
Operating temperature range (min, max)	-40°C...+125°C

Material properties	
Other materials	Lever: Stainless steel, polyamide (PA) Gasket: NBR
Colour	RAL 7040 grey
RoHs conformity	Compliant
China RoHs - EFUP	E
REACH SVHC substances	No
Approvals / Standards	
Certifications	DNV, BV
UL	ECBT2
cUL	ECBT8
General ordering information	
EAN13 code	8015747234931
eCl@ss 8.1	27440202
ETIM 7.0	EC000437
Packaging Information	
Packaging length	160,00 mm
Packaging height	130,00 mm
Packaging width	270,00 mm
Packaging weight	1,90 kg
Packaging volume	5,62 dm³
Packaging description	Carton box
Packaging quantity	10 Pcs
Packaging EAN code	8015747292757
Sub-packaging weight	0,95 kg
Sub-packaging description	Plastic packaging
Sub-packaging quantity	5 Pcs
Sub-packaging EAN barcode	8015747235051

Part number

MFV 06 LG40

Catalogue drawings

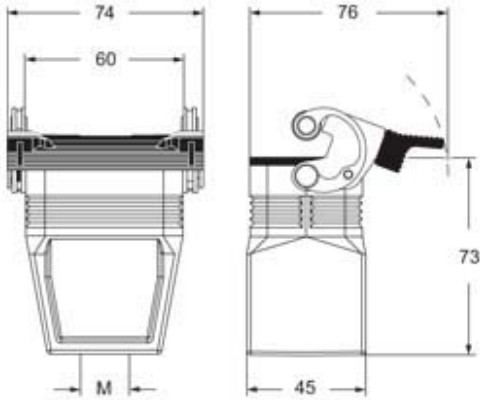

Notes