Part number

CKX 03 IAPS

Angled Bulkhead mounting housing, CK series, with 1 lever, Pg11 cable entry, size "21.21", white colour

Product description	
Product type	Angled bulkhead mounting housing
Series	CK
Closing type	With 1 lever
Size	Size "21.21"
Cable entry	With cable entry Pg11
Specification	White colour
Technical data	
IP degree of protection	IP44 - IP66 / IP67 / IP69 with CKR 65 (D)
Further technical details	
Weight	24,00 g
Operating temperature range (min, max)	-40°C...+125°C

Material properties	
Colour	RAL 7035 grey
RoHs conformity	Compliant
China RoHs - EFUP	E
REACH SVHC substances	No
Approvals / Standards	
UL	ECBT2
cUL	ECBT8
General ordering information	
EAN13 code	8015747028523
Packaging Information	
Packaging length	360,00 mm
Packaging height	165,00 mm
Packaging width	315,00 mm
Packaging weight	2,50 kg
Packaging volume	18,71 dm³
Packaging description	Carton box
Packaging quantity	100 Pcs
Packaging EAN code	8015747262538
Sub-packaging weight	0,25 kg
Sub-packaging description	Carton box
Sub-packaging quantity	10 Pcs
Sub-packaging EAN barcode	8015747111812

Part number

CKX 03 IAPS

Catalogue drawings

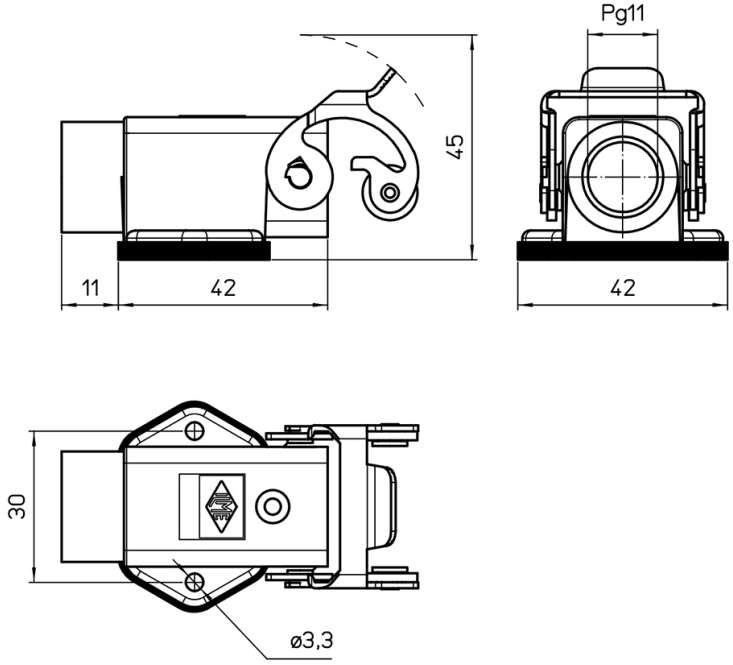

Catalogue drawings

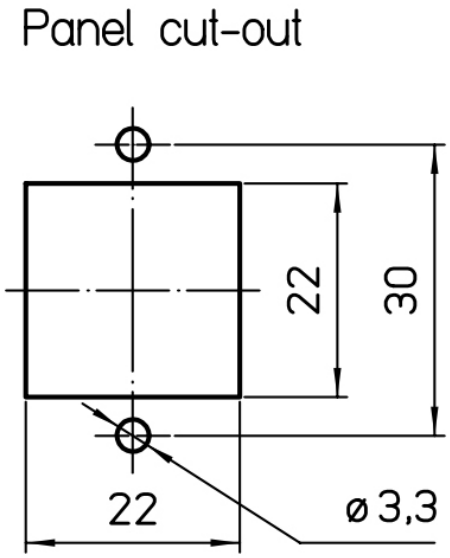

Notes