Part number

# MKAXS IAP20

Angled Bulkhead mounting housing, EMC series, with 1 lever, M20 cable entry, size "21.21"

| Product description | |
|---|---|
| **Product type** | Angled bulkhead mounting housing |
| **Series** | EMC |
| **Closing type** | With 1 lever |
| **Size** | Size "21.21" |
| **Cable entry** | With cable entry<br>M20 |
| **Technical data** | |
| **IP degree of protection** | IP44 - IP66 / IP67 / IP69 with CKR 65 (D) |
| **Further technical details** | |
| **Weight** | 74,00 g |
| **Operating temperature range (min, max)** | -40°C...+125°C |

| Material properties | |
|---|---|
| **Main material** | Zinc die-cast |
| **Colour** | RAL 7040 grey |
| **RoHs conformity** | Compliant |
| **China RoHs - EFUP** | E |
| **REACH SVHC substances** | No |
| **Approvals / Standards** | |
| **Certifications** | DNV, BV |
| **UL** | ECBT2 |
| **cUL** | ECBT8 |
| **General ordering information** | |
| **EAN13 code** | 8015747101356 |
| **eCl@ss 8.1** | 27440202 |
| **ETIM 7.0** | EC000437 |
| **Packaging Information** | |
| **Sub-packaging weight** | 0,07 kg |
| **Sub-packaging description** | Plastic bag |
| **Sub-packaging quantity** | 1 Pcs |
| **Sub-packaging EAN barcode** | 8015747101370 |

Part number

# MKAXS IAP20

Catalogue drawings

**CKAXS I**

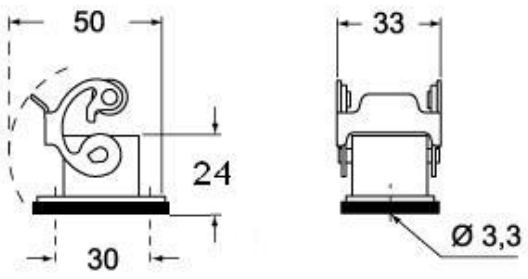


**CKAXS IA**

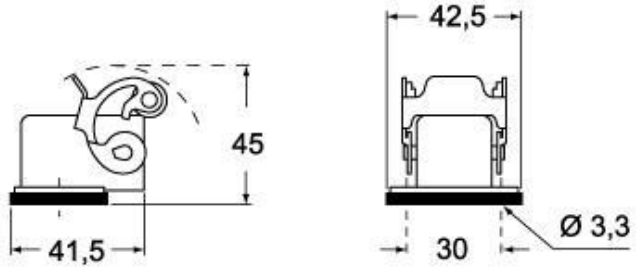

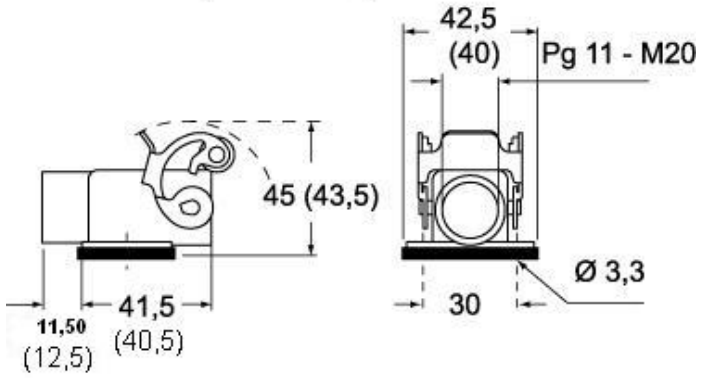
**CKAXS IAP (CKAXS AP)**
**MKAXS IAP (MKAXS AP)**