Part number

MKAXS IAP20

Angled Bulkhead mounting housing, EMC series, with 1 lever, M20 cable entry, size "21.21"

Product description	
Product type	Angled bulkhead mounting housing
Series	EMC
Closing type	With 1 lever
Size	Size "21.21"
Cable entry	With cable entry M20
Technical data	
IP degree of protection	IP44 - IP66 / IP67 / IP69 with CKR 65 (D)
Further technical details	
Weight	74,00 g
Operating temperature range (min, max)	-40°C...+125°C

Material properties	
Main material	Zinc die-cast
Colour	RAL 7040 grey
RoHs conformity	Compliant
China RoHs - EFUP	E
REACH SVHC substances	No
Approvals / Standards	
Certifications	DNV, BV
UL	ECBT2
cUL	ECBT8
General ordering information	
EAN13 code	8015747101356
eCl@ss 8.1	27440202
ETIM 7.0	EC000437
Packaging Information	
Sub-packaging weight	0,07 kg
Sub-packaging description	Plastic bag
Sub-packaging quantity	1 Pcs
Sub-packaging EAN barcode	8015747101370

Part number

MKAXS IAP20

Catalogue drawings

CKAXS I

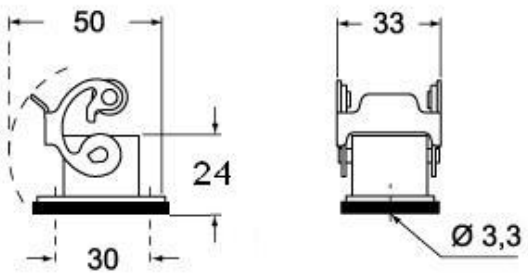

CKAXS IA

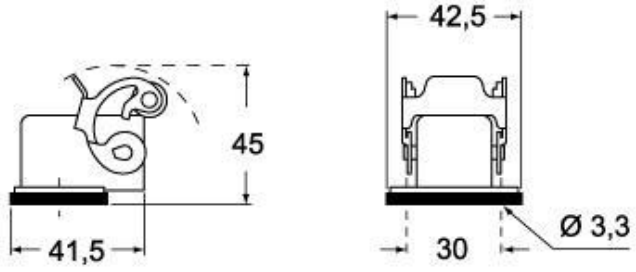
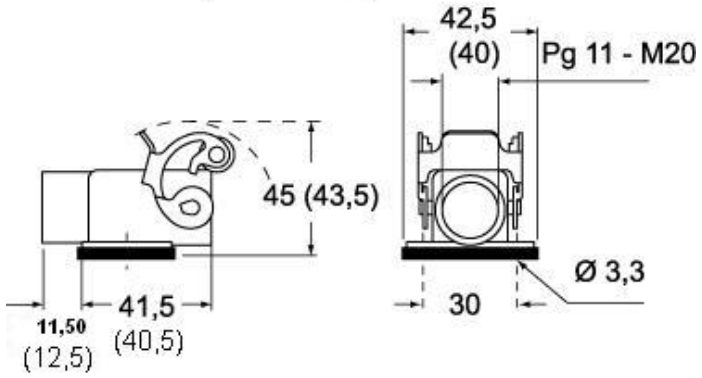
CKAXS IAP (CKAXS AP)
MKAXS IAP (MKAXS AP)