Part number

MKAXS AP20

Angled Bulkhead mounting housing, EMC series, with 1 lever, M20 cable entry, size "21.21"

Product description	
Product type	Angled bulkhead mounting housing
Series	EMC
Closing type	With 1 lever
Size	Size "21.21"
Cable entry	With cable entry M20
Technical data	
IP degree of protection	IP44 - IP66 / IP67 / IP69 with CKR 65 (D)
Further technical details	
Weight	71,00 g
Operating temperature range (min, max)	-40°C...+125°C

Material properties	
Main material	Zinc die-cast
Colour	RAL 7040 grey
RoHs conformity	Compliant
China RoHs - EFUP	E
REACH SVHC substances	No
Approvals / Standards	
Certifications	DNV, BV
UL	ECBT2
cUL	ECBT8
General ordering information	
EAN13 code	8015747099950
eCl@ss 8.1	27440202
ETIM 7.0	EC000437
Packaging Information	
Packaging length	450,00 mm
Packaging height	175,00 mm
Packaging width	230,00 mm
Packaging weight	8,00 kg
Packaging volume	18,11 dm³
Packaging description	Carton box
Packaging quantity	100 Pcs
Packaging EAN code	8015747234085
Sub-packaging length	210,00 mm
Sub-packaging height	40,00 mm
Sub-packaging width	175,00 mm
Sub-packaging weight	0,80 kg
Sub-packaging volume	1,47 dm³
Sub-packaging description	Carton box
Sub-packaging quantity	10 Pcs
Sub-packaging EAN barcode	8015747234092

Part number

MKAXS AP20
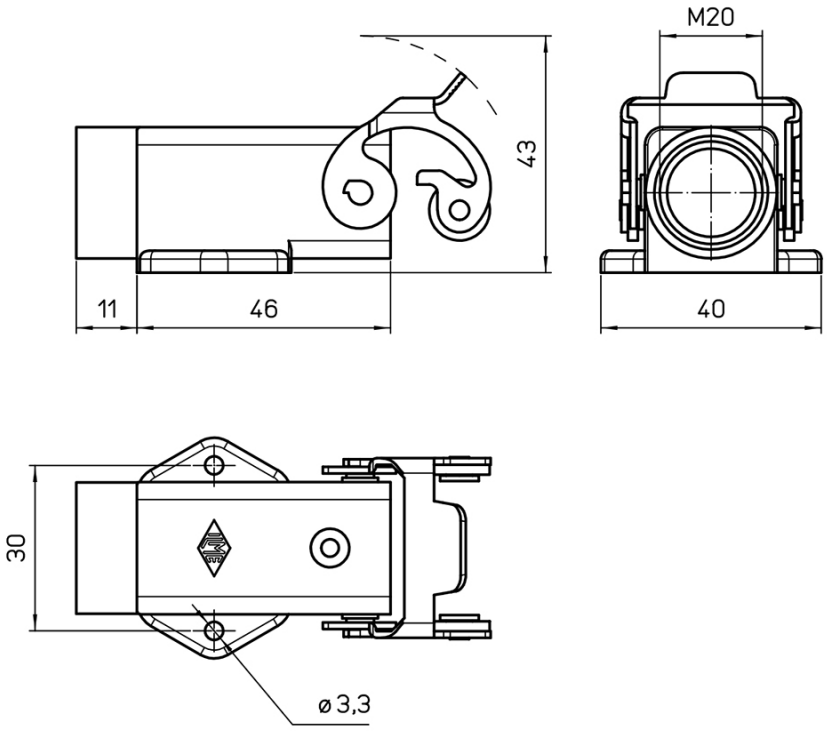
Catalogue drawings